MARK	DATE	REVISION	REVISER	APP .BY
1				
2				
3				

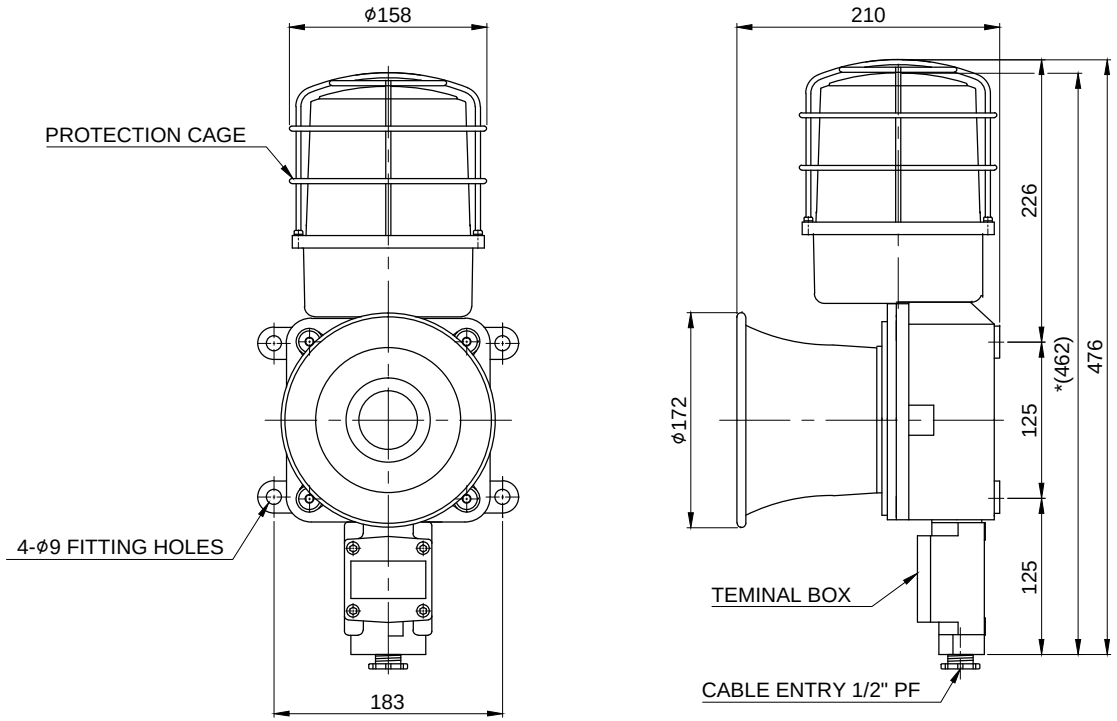

MODEL NO			SMDL			
MATERIAL			HOUSING-AL			
			LENS-PC			
			REFLECTOR-HEAT RESISTING ABS			
			PROTECTION CAGE-SUS316L			
COLOR OF LENS			RED( ), AMBER( ), GREEN( ), BLUE( )			
FLASHING PER MIN.			60 ~ 80			
USE VOLT.	LED	CURRENT	DC12V	0.08W	MAX. 2.400A	
			DC24V		MAX. 1.255A	
			AC110V		MAX. 0.304A	
			AC220V		MAX. 0.152A	
PROTECTION GRADE			WATER & DUST PROOF IP66			
CABLE ENTRY			1/2" PF			
COLOR OF HOUSING			MUNSELL NO. 7.5BG 7/2			
ACTION			LED STEADY/ FLASHING LIGHT			

※ *(462) represents size without protection cage.

ISO2768-1 : CLASS OF TOLERANCE		f	m	c	v
FOR LINEAR DIMENSIONS	0.5~3	±0.05	±0.1	±0.2	-
	3~6			±0.3	±0.5
	6~30	±0.1	±0.2	±0.5	±1
	30~120	±0.15	±0.3	±0.8	±1.5
	120~400	±0.2	±0.5	±1.2	±2.5
	400~1000	±0.3	±0.8	±2	±4
FOR ANGULAR DIMENSIONS	0~10	±1°		±1°30'	±3°
	10~50	±0°30'		±1°	±2°
	50~120	±0°20'		±0°30'	±1°
	120~400	±0°10'		±0°13'	±0°30'

SURFACE FINISH

Nr.	DWG. NO.	TITLE/ NAME	MAT'L	QT'Y	REFERENCE
-	-	-	-	1	-

DSND BY	CHKD BY	CHKD BY	APRV BY	VIEW	DATE
S.H.KIM	J.H.PARK		J.K.HAN	3	2016.08.30

TITLE: SMDL OUTLINE DRAWING

MODEL: SMDL

DWG. NO.: SMDL_OUT

SCALE	SIZE	REV	SHEET
N/S	A4	00	1/1

A4(297X210)