MARK	DATE	REVISION	REVISER	APP .BY
1				
2				
3				

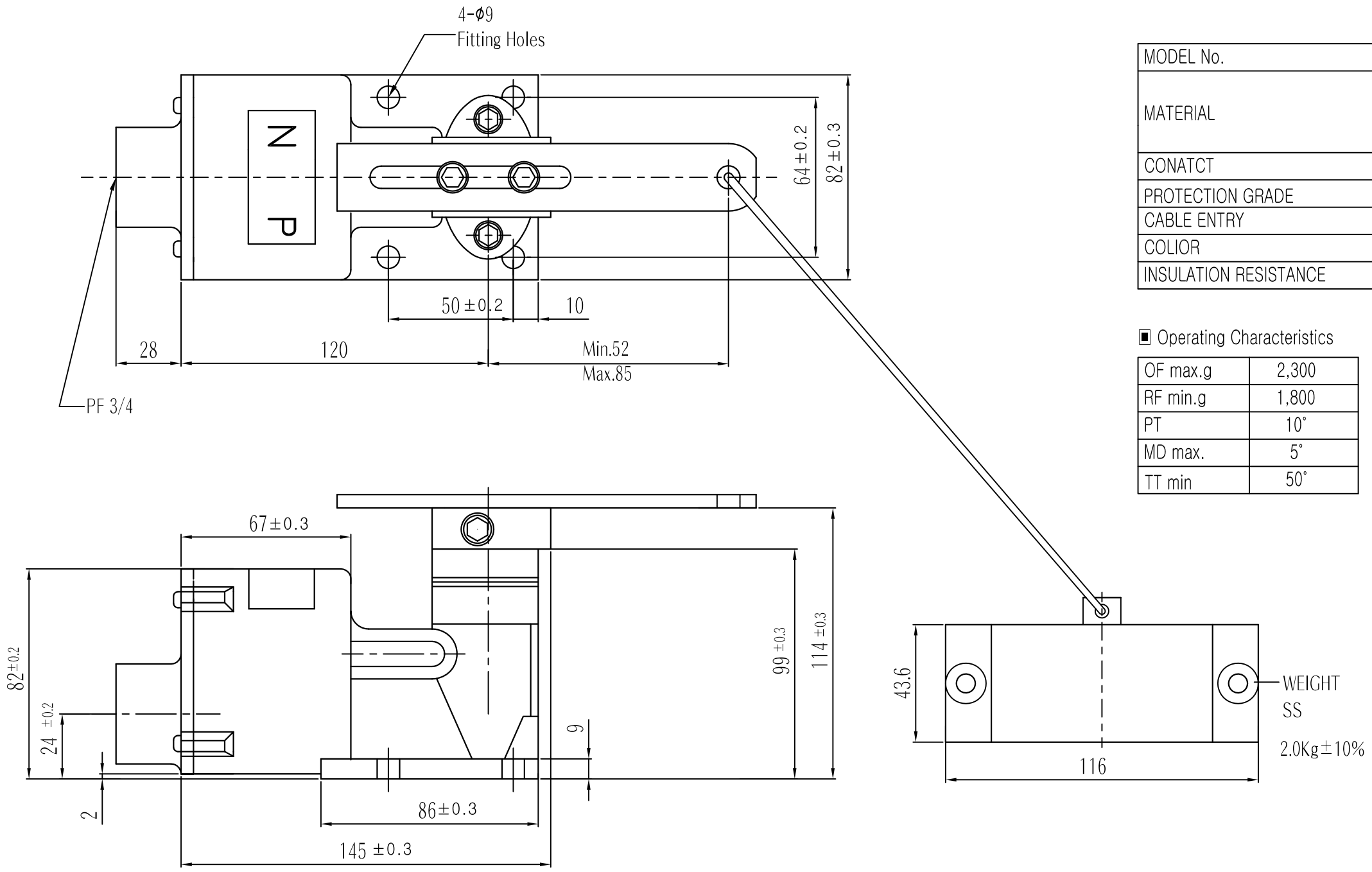

MODEL No.	SH8560-W / SH8560S-W
MATERIAL	SH8560-W : HEAD & BODY - DIE CAST AL
	SH8560S-W : HEAD & BODY - CAST BRASS
	BOLT,NUT & ETC. - SUS304
CONATCT	2CKT-DB, 1A1B, 250VAC 6A
PROTECTION GRADE	WATER & DUST PROOF - IP56
CABLE ENTRY	PF 3/4
COLIOR	MAKER STANDARD
INSULATION RESISTANCE	100MΩ MIN. at 500V DC

■ Operating Characteristics

OF max.g	2,300
RF min.g	1,800
PT	10°
MD max.	5°
TT min	50°

ISO2768-1 : CLASS OF TOLERANCE		f	m	c	v
FOR LINEAR DIMENSIONS	0.5~3	±0.05	±0.1	±0.2	—
	3~6			±0.3	±0.5
	6~30	±0.1	±0.2	±0.5	±1
	30~120	±0.15	±0.3	±0.8	±1.5
	120~400	±0.2	±0.5	±1.2	±2.5
	400~1000	±0.3	±0.8	±2	±4
FOR ANGULAR DIMENSIONS	0~10	±1°		±1° 30'	±3°
	10~50	±0° 30'		±1°	±2°
	50~120	±0° 20'		±0° 30'	±1°
	120~400	±0° 10'		±0° 13'	±0° 30'

SURFACE FINISH

Nr.	DWG. NO.	TITLE/ NAME	MAT'L	QT'Y	REFERENCE
-		-	-	-	-

DSND BY	CHKD BY	CHKD BY	APRV BY	VIEW	DATE
U.H LEE	U.H LEE			3	2012.01.27

TITLE OUT-LINE DRAWING (SH8560-W / SH8560S-W)

MODEL SH8560-W / SH8560S-W

DWG. NO. SH8560-W-OUT SH8560S-W-OUT

SCALE	SIZE	REV	SHEET
1/1	A3	00	1/-

A3(420X297)